BOSSARD
Proven Productivity

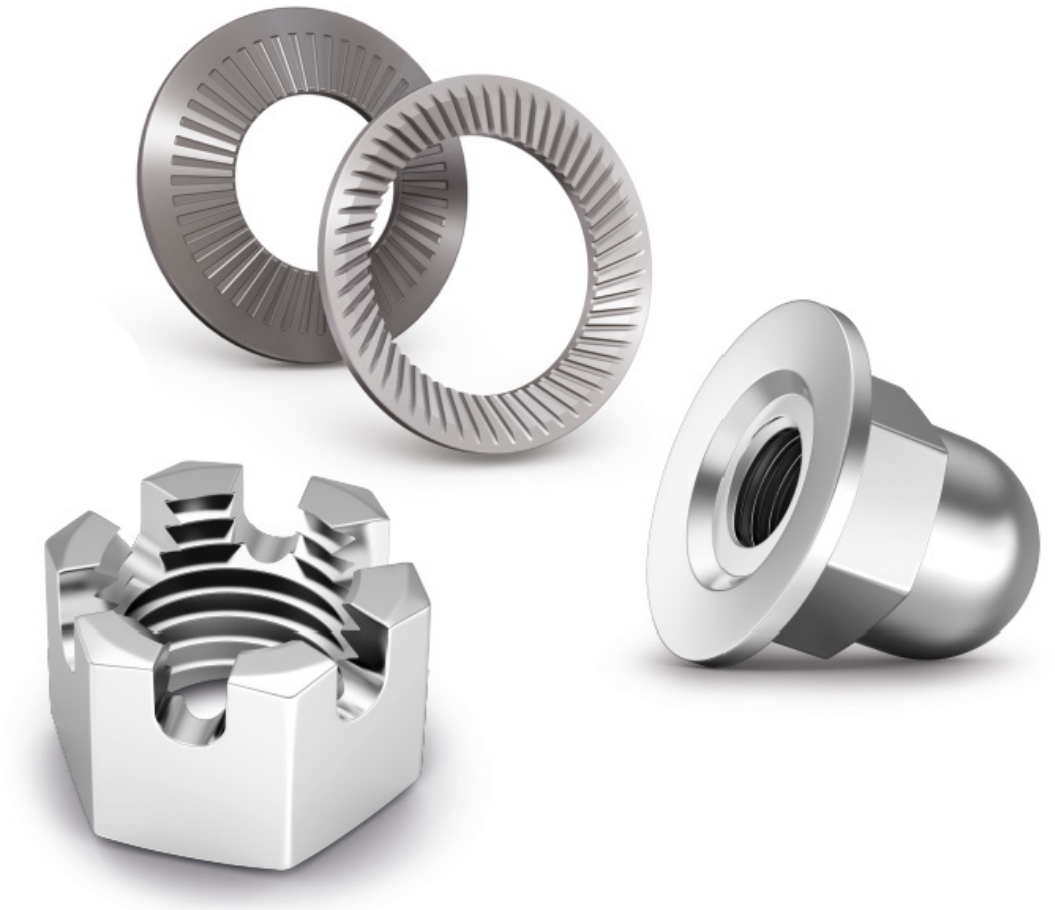

Fastening elements

All-metal



"Multi-functional fastening elements combine a number of different methods ofsecuring the fastened joint in a single element."

Benefits of using secure washers and nuts

In a fastened joint, different measures are taken to prevent the fasteners from loosening, unscrewing and getting lost. Multi-functional fastening elements combine a number of different methods of securing the fastened joint in a single element.

This produces not only technical benefits, but also leads to a significant reduction in procurement, storing and assembly costs

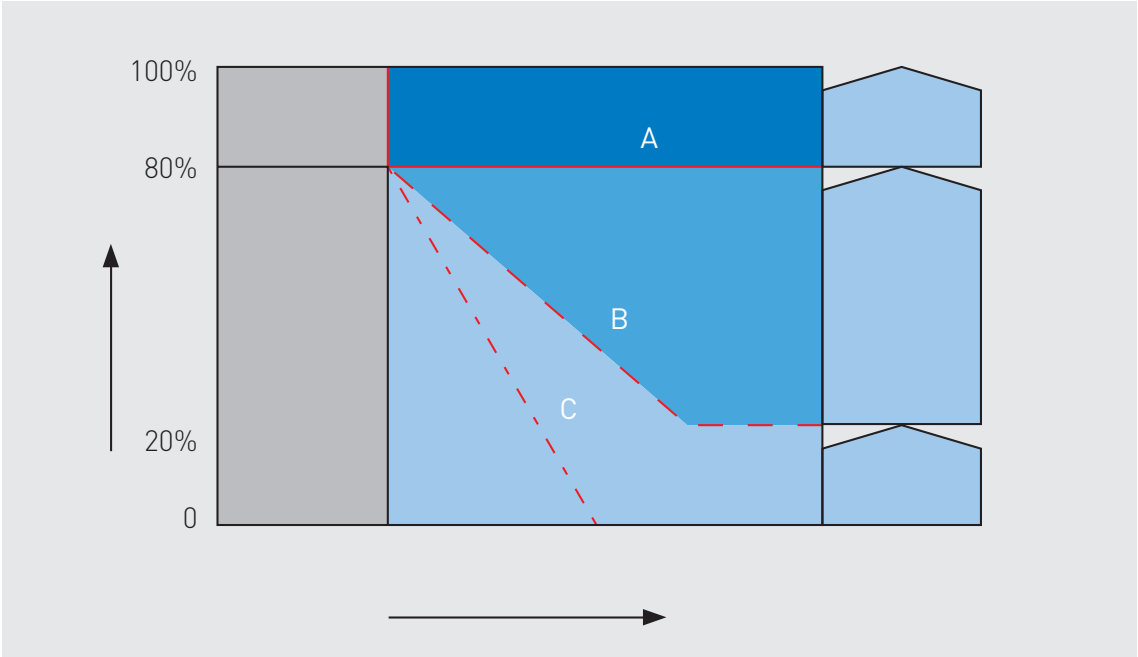

Loosening

Loosening mainly occurs as the result of axial forces. Rough interfaces are smoothed off and seals which are part of the screw connection may yield. The working load can also lead to a plastic elongation of the fastening element. The fastener work loosen and the preload force reduced. The screw or nut does not rotate.

Unscrewing

If the dynamic shear forces working on a screwed connection are so great that the assembled parts move back and forth resulting in the screw or nut can be unscrewed resulting in decreased preload.

Loss

Once a screw or nut starts to unscrew it will continue to unscrew even when subject to only a low level of vibration. This can eventually lead to lost fasteners.

Subject to change without notice. Please refer to your local Bossard E-Shop for the current assortment and dimensions.
Other variants upon request.

© Bossard / Fastening elements / en / 12-2026 / Subject to change without notice.

Measures to prevent fasteners from loosening

Methods to prevent a fastening from working loose work due to a reduction in the contact pressure or an increase in the elasticities of the fastening elements.

- Increased grip length
- Increased bearing face area
- Complimentary spring elements (up to class 8.8)

Measures to prevent fastening from unscrewing

These measures prevent the fastener from unscrewing by itself. They maintain up to 80% of the original preload force.

- Profiled fastening elements
- Mechanical protection
- Chemical protection

Measures to prevent loss of the fastener

Protection against loss allows fastening elements to partially unscrew but prevents their loss. These measures maintain up to 20% of the original preload force.

- Locking nuts
- Grip coatings
- Thread-forming elements

© Bossard / Fastening elements / en / 12-2026 / Subject to change without notice.

Subject to change without notice. Please refer to your local Bossard E-Shop for the current assortment and dimensions.
Other variants upon request.

All-metal fastening elements

Prevailing torque type hexagon lock nuts type V3 **~DIN 980 V**, all-metal

BN 64 | Steel 8, zinc plated

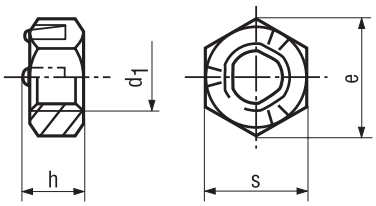

d_1	h max.	s	e min.	
M5	4,5	8	8,79	
M6	5,5	10	11,05	
M8	7	13	14,38	
M10	8,6	17	18,9	

Prevailing torque type hexagon lock nuts **DIN 980 V**, all-metal

BN 169 | Steel 8, zinc plated, without collar, **BN 170** | Steel 8, zinc plated, with collar

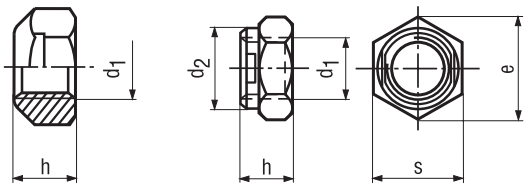

BN 169 **BN 170**

M18 with or without collar
it depends on the producer

M20–M24 with collar

d_1	h max.	s	e min.	d_2	
M4	4,2	7	7,66		
M5	5,1	8	8,79		
M6	6	10	11,05		
M8	8	13	14,38		
M10	10	17	18,9		
M12	12	19	21,1		
M14	14	22	24,49		
M16	16	24	26,75		
M18	18	27	29,56	23	
M20	20	30	32,95	27,5	
M22	22	32	35,03	29,5	
M24	24	36	39,55	31	

Subject to change without notice. Please refer to your local Bossard E-Shop for the current assortment and dimensions.
Other variants upon request.

© Bossard / Fastening elements / en / 12-2026 / Subject to change without notice.

Prevailing torque type hexagon lock nuts **~DIN 980 V**, all-metal

BN 5242 | Stainless steel A2

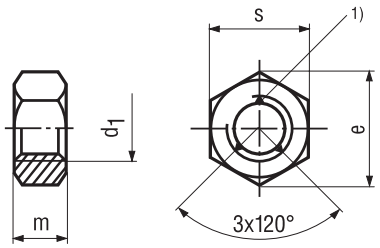

d_1	m max.	s	e	
M3	2,4	5,5	6,01	O
M4	3,2	7	7,66	O
M5	4	8	8,79	O
M6	5	10	11,05	O
M8	6,5	13	14,38	O
M10	8	17	18,9	O
M12	10	19	21,1	O
M16	13	24	26,75	O
M20	16	30	32,95	O

[1] 3 pressure points on one side

Prevailing torque type hexagon flange lock nuts **DIN 6927 A**, all-metal

BN 6782 | Steel 8, zinc plated

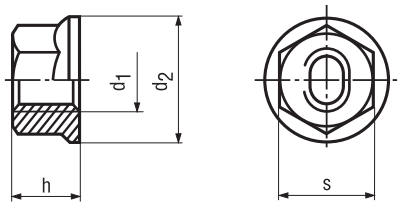

d_1	d_2 max.	h max.	s	
M5	11,8	6,2	8	⧈
M6	14,2	7,3	10	⧈
M8	17,9	9,4	13	⧈
M10	21,8	11,4	15	⧈
M12	26	13,8	18	⧈
M16	34,5	18,3	24	⧈

Subject to change without notice. Please refer to your local Bossard E-Shop for the current assortment and dimensions.
Other variants upon request.

© Bossard / Fastening elements / en / 12-2026 / Subject to change without notice.

Prevailing torque type hexagon lock nuts type FS **DIN 980 M**, all-metal

BN 20168 | Steel 8, zinc plated yellow

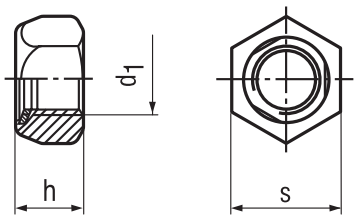

d_1	h	s	
M6	6	10	◉
M8	8	13	◉
M10	10	17	◉
M12	12	19	◉
M16	16	24	◉
M20	20	30	◉
M24	24	36	◉
M30	30	46	◉

Prevailing torque type hexagon lock nuts type Vargal®, all-metal

BN 20125 | Steel ~8, zinc plated

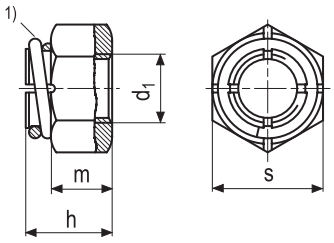

[1] Spring: M5 – M18 Steel hot-dip galvanized
M20 – M24 stainless steel
M27 – M36 Steel phosphated

d_1	h max.	m	s	
M5	6,3	4	8	⧈
M6	8,2	4,5	10	⧈
M8	10,8	6,7	13	⧈
M10	12,6	8	17	⧈
M12	16	10,6	19	⧈
M14	18	12	22	⧈
M16	20,6	13,5	24	⧈
M18	22,5	14,5	27	⧈
M20	25,5	16,9	30	⧈
M22	29,8	20,5	32	⧈
M24	29,9	20,6	36	⧈
M27	33,7	24,3	41	⧈
M30	37	26,6	46	⧈
M33	40,5	28,8	50	⧈
M36	44,2	31,5	55	⧈

Subject to change without notice. Please refer to your local Bossard E-Shop for the current assortment and dimensions.
Other variants upon request.

© Bossard / Fastening elements / en / 12-2026 / Subject to change without notice.

Prevailing torque type hexagon lock nuts ~DIN 980 M, high type, all-metal

BN 19174 | Steel 6 / spring steel, zinc plated

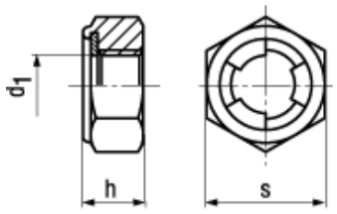

d_1	s	h ±0,2	
M4	7	3,8	
M5	8	4,6	
M6	10	5,3	
M8	13	7,3	
M10	17	8,3	
M12	19	10,5	
M16	24	14,5	
M20	30	17,5	

Prevailing torque type hexagon lock nuts ~DIN 980 M, low type, all-metal

BN 19175 | Steel 04 / spring steel, zinc plated

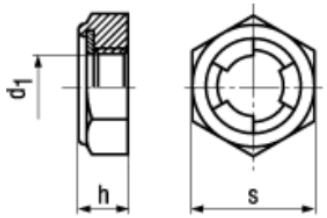

d_1	s	h ±0,2	
M6	10	4,3	
M8	13	5	
M10	17	6,5	
M12	19	8,5	
M16	24	12	

Subject to change without notice. Please refer to your local Bossard E-Shop for the current assortment and dimensions.
Other variants upon request.

© Bossard / Fastening elements / en / 12-2026 / Subject to change without notice.

Prevailing torque type hexagon lock nuts Palnut® **DIN 7967**

■ **BN 1964** | Spring steel, black

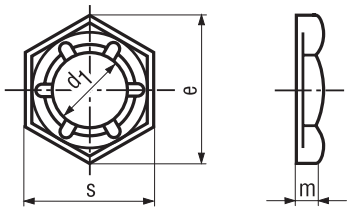

d_1	~ e	s	m	
M4	8,1	7	2,5	■
M5	9,2	8	2,5	■
M6	11,5	10	3	■
M8	15	13	3,5	■
M10	19,6	17	4	■
M12	21,9	19	4,5	■
M16	27,7	24	5	■
M20	34,6	30	6	■
M22	36,9	32	6	■
M24	41,6	36	7	■
M30	53,1	46	8	■

Prevailing torque type hexagon lock nuts Serpress®, all-metal

▣ **BN 20219** | Steel 6, zinc plated, ◙ **BN 185** | Steel 6, zinc plated yellow

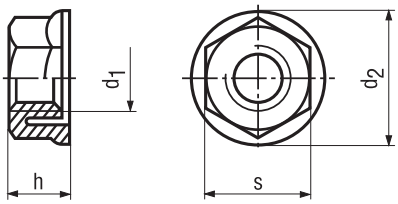

d_1	d_2	h	s	
M4	9	3,7	7	▣ ◙
M5	10,5	4,4	8	▣ ◙
M6	12,5	5,2	10	▣ ◙
M8	16	7	13	▣ ◙

Hexagon slotted and castle nuts **DIN 935**

▣ **BN 8365** | Steel 6, zinc plated

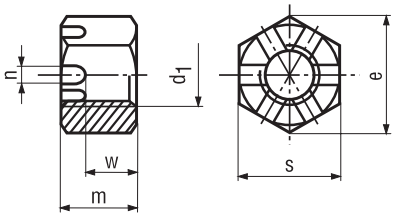

d_1	e min.	m max.	w max.	n min.	s	
M4	7,66	5	3,2	1,2	7	▣
M5	8,79	6	4	1,4	8	▣
M6	11,05	7,5	5	2	10	▣

Subject to change without notice. Please refer to your local Bossard E-Shop for the current assortment and dimensions.
Other variants upon request.

© Bossard / Fastening elements / en / 12-2026 / Subject to change without notice.

Hexagon slotted and castle nuts **DIN 935**

BN 157 | Steel 8, zinc plated, ● **BN 636** | Stainless steel A4

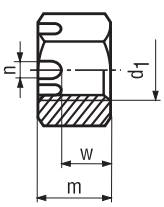

M6-M10

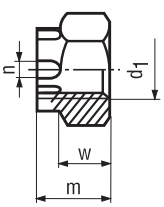

M12-M20

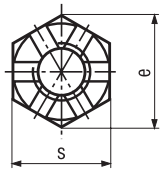

d1	e min.	m max.	w max.	n min.	s	
M6	11,05	7,5	5	2	10	●
M8	14,38	9,5	6,5	2,5	13	⧈ ●
M10	18,9	12	8	2,8	16	⧈ ●
M12	21,1	15	10	3,5	18	⧈ ●
(M14)	24,49	16	11	3,5	21	⧈
M16	26,75	19	13	4,5	24	⧈ ●
(M18)	29,56	21	15	4,5	27	⧈
M20	32,95	22	16	4,5	30	⧈ ●
(M22)	35,03	26	18	5,5	34	⧈
M24	39,55	27	19	5,5	36	⧈
(M27)	45,2	30	22	5,5	41	⧈
M30	50,85	33	24	7	46	⧈
(M33)	55,37	35	26	7	50	⧈
M36	60,79	38	29	7	55	⧈
(M39)	66,44	40	31	7	60	⧈
M42	71,3	46	34	9	65	⧈
(M45)	76,95	48	36	9	70	⧈
M48	82,6	50	38	9	75	⧈

Hexagon slotted and castle nuts **DIN 935**, metric fine thread

BN 160 | Steel 6 / 8, zinc plated

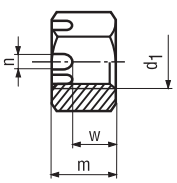

M8x1 - M10x1,25

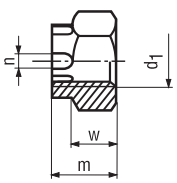

M12x1,25 - M36x3

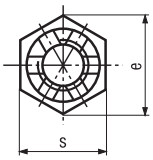

d1	e min.	m max.	w max.	n min.	s	
M8x1	14,38	9,5	6,5	2,5	13	⧈
M10x1,25	18,9	12	8	2,8	16	⧈
M12x1,25	21,1	15	10	3,5	18	⧈
(M14x1,5)	24,49	16	11	3,5	21	⧈
M16x1,5	26,75	19	13	4,5	24	⧈
(M18x1,5)	29,56	21	15	4,5	27	⧈
M20x1,5	32,95	22	16	4,5	30	⧈
(M22x1,5)	35,03	26	18	5,5	34	⧈
M24x2	39,55	27	19	5,5	36	⧈
M30x2	52,85	33	24	7	46	⧈
M36x3	60,79	38	29	7	55	⧈

Subject to change without notice. Please refer to your local Bossard E-Shop for the current assortment and dimensions.
Other variants upon request.

© Bossard / Fastening elements / en / 12-2026 / Subject to change without notice.

Hexagon flange nuts **DIN 6923**

▣ **BN 41187** | Steel 8, zinc plated, ◉ **BN 1973** | Steel 8, zinc plated yellow, ○ **BN 14476** | Stainless steel A2

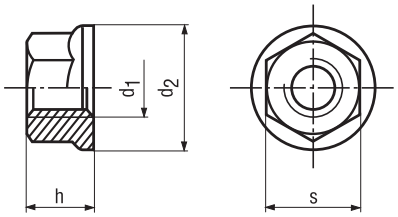

d1	d_2 max.	s	h max.	
M3	8	5,5	4	○
M4	10	7	4,65	○
M5	11,8	8	5	▣ ◉ ○
M6	14,2	10	6	▣ ◉ ○
M8	17,9	13	8	▣ ◉ ○
M10	21,8	15	10	▣ ◉ ○
M12	26	18	12	▣ ◉ ○
M14	29,9	21	14	◉
M16	34,5	24	16	▣ ◉
M20	42,8	30	20	◉

Hexagon flange nuts

▣ **BN 860** | Steel 5, zinc plated

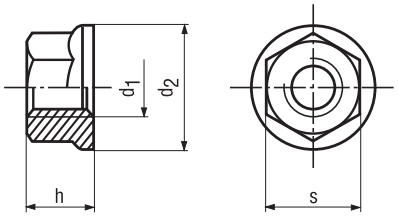

d1	d_2 max.	s	h max.	
M3	8	5,5	3,7	▣
M4	10	7	4,5	▣
M5	12	8	5,5	▣
M6	13	10	6	▣

Subject to change without notice. Please refer to your local Bossard E-Shop for the current assortment and dimensions.
Other variants upon request.

© Bossard / Fastening elements / en / 12-2026 / Subject to change without notice.

Hexagon serrated flange nuts ~DIN 6923

▣ **BN 30312** | Steel 8, zinc plated, ● **BN 11207** | Stainless steel A4

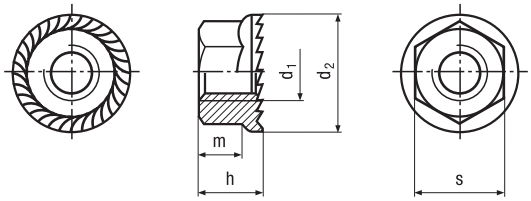

d1	d_2 max.	s	h max.	m min.	
M3	8	5,5	4	1,6	●
M4	10	7	4,65	1,9	●
M5	11,8	8	5	2,2	▣ ●
M6	14,2	10	6	3,1	▣ ●
M8	17,9	13	8	4,5	▣ ●
M10	21,8	15	10	5,5	▣ ●
M12	26	18	12	6,7	▣ ●
M16	34,5	24	16	9	▣

Hexagon locking nuts VERBUS-TENSILOCK

■ **BN 190** | Steell 8, black

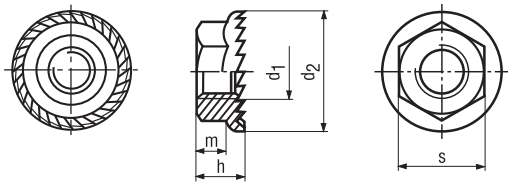

d1	d_2 ~	s	h~	m ~	
M5	11,2	8	4,3	2,55	■
M6	14,25	10	5,5	3,3	■
M8	18,25	13	7	4,4	■
M10	21	15	7,9	5,1	■

Subject to change without notice. Please refer to your local Bossard E-Shop for the current assortment and dimensions.
Other variants upon request.

© Bossard / Fastening elements / en / 12-2026 / Subject to change without notice.

Hexagon locking nuts VERBUS RIPP

■ **BN 2798** | Steel 10, black, ⧈ **BN 14527** | Steel 10, zincflake coated

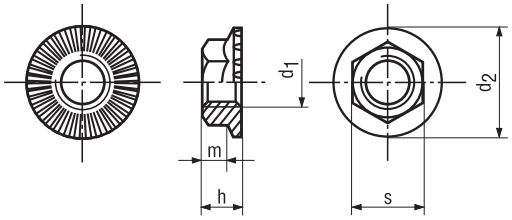

d1	d_2	s	h	m min.	
M5	11,2	8	4,3	1,7	■ ⧈
M6	14,2	10	5,5	2,3	■ ⧈
M8	18,2	13	7	3	■ ⧈
M10	21	15	8,5	3,6	■ ⧈
M12	24	17	10	4,4	■ ⧈
M16	31	22	14	6,7	■ ⧈

Hexagon nuts with concial spring washer

⧈ **BN 712** | Steel 8 / spring steel, zinc plated

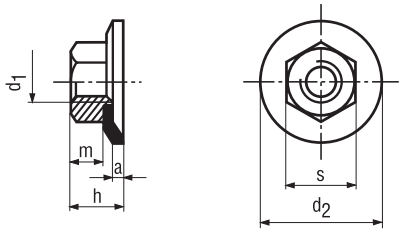

d_1	s max.	m max.	d_2 max.	h ~	a	
M3	5,5	2,4	10	4	0,8	⧈
M4	7	3,2	12	5	1	⧈
M5	8	4	15	6	1,2	⧈
M6	10	5	18	7,5	1,5	⧈
M8	13	6,5	23	9,7	2	⧈
M10	17	8	28	12	2,5	⧈

Subject to change without notice. Please refer to your local Bossard E-Shop for the current assortment and dimensions.
Other variants upon request.

© Bossard / Fastening elements / en / 12-2026 / Subject to change without notice.

Hexagon nuts with external tooth lock washer

⧈ **BN 1364** | Steel 8 / spring steel 350 HV, zinc plated

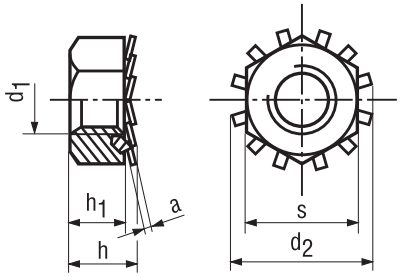

d_1	d_2 max.	h max.	h_1 max.	a	s	
M3	6,7	3,3	2,4	0,45	5,5	⧈
M4	8,2	4,1	3,2	0,45	7	⧈
M5	9,3	5,2	4	0,5	8	⧈
M6	11,2	6,2	5	0,5	10	⧈
M8	15,1	8,5	6,5	0,8	13	⧈
M10	19,2	9,7	8	0,9	17	⧈

Hexagon nuts with conical spring washer

⧈ **BN 1365** | Steel 8 / spring steel 420 HV, zinc plated

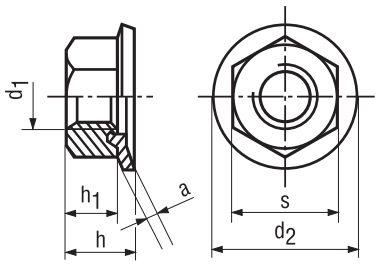

d_1	d_2 max.	h max.	h_1 max.	a	s	
M4	10	4,2	3,2	0,45–0,65	7	⧈
M5	12	5,3	4	0,7 –0,9	8	⧈
M6	14	6,6	5	0,9 –1,1	10	⧈
M8	18	8,8	6,5	1,25–1,45	13	⧈
M10	22	10,7	8	1,4 –1,7	17	⧈
M12	25,5	13,8	10	2,1 –2,4	19	⧈

Hex dom cap nuts **~DIN 1587**, with attached concial spring washe

○ **BN 20190** | Stainless steel A2

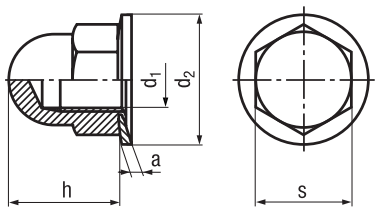

d_1	h	s	d_2	a	
M4	8	7	10	0,5	○
M5	10	8	12	0,8	○
M6	12	10	14	1	○
M8	15	13	18	1,3	○
M10	18	17	22	1,5	○

Subject to change without notice. Please refer to your local Bossard E-Shop for the current assortment and dimensions.
Other variants upon request.

© Bossard / Fastening elements / en / 12-2026 / Subject to change without notice.

Lock washers

Spring lock washers **~DIN 128 A**

⊞ **BN 20193** | spring steel, mechanical zing plated

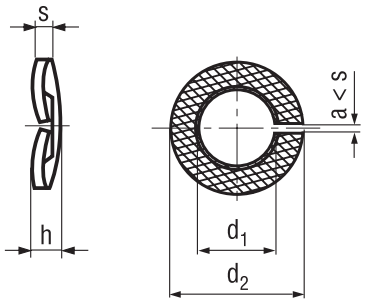

M	d_1 min	d_2 max.	h min.	s	
M5	5,1	9,2	1,5	1	⊞
M6	6,1	11,8	2	1,3	⊞
M8	8,1	14,8	2,45	1,6	⊞
M10	10,2	18,1	2,85	1,8	⊞
M12	12,2	21,1	3,35	2,1	⊞
M16	16,2	27,4	4,5	2,8	⊞
M20	20,2	33,6	5,1	3,2	⊞
M24	24,5	40	6,5	4	⊞

Spring lock washers **~DIN 128 A**

○ **BN 20194** | Stainless steel 1.4310

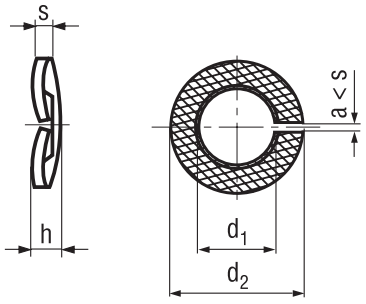

M	d_1 min	d_2 max.	h min.	s	
M5	5,1	9,2	1,8	1,2	○
M6	6,1	11,8	2,4	1,6	○
M8	8,1	14,8	3	2	○
M10	10,1	18	3,4	2,2	○
M12	12,1	21	3,9	2,5	○
M16	16,1	27,3	5,5	3,5	○
M20	20,2	33,6	6,3	4	○
M24	24,5	40	6,3	5	○

Subject to change without notice. Please refer to your local Bossard E-Shop for the current assortment and dimensions.
Other variants upon request.

© Bossard / Fastening elements / en / 12-2026 / Subject to change without notice.

Ribbed lock washers

■ **BN 20193** | Spring steel 420–510 HV, black

▣ **BN 14083** | Spring steel 420–510 HV, zinc plated

⊞ **BN 792** | Spring steel 420–510 HV, mechanical zinc plated

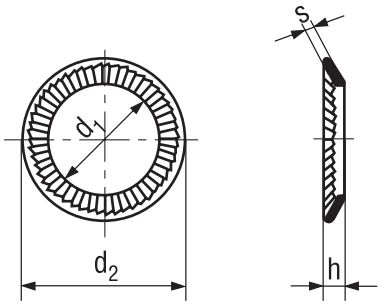

M	d_1	d_2	h max.	s	
M2	2,2	4	0,6	0,35	■ ▣
M2,5	2,7	4,8	0,9	0,45	■ ▣
M3	3,2	5,5	0,9	0,45	■ ⊞
M3,5	3,7	6	0,9	0,45	■ ▣
M4	4,3	7	1	0,5	■ ⊞
M5	5,3	8,5 / 9*	1,1	0,6	■ ⊞
M6	6,4	10	1,2	0,7	■ ⊞
M7	7,4	12	1,3	0,7	■ ⊞
M8	8,4	13	1,4	0,8	■ ⊞
M10	10,5	16	1,6	1	■ ⊞
M12	13	18	1,7	1,1	■ ⊞
M14	15	21 / 22*	2	1,2	■ ⊞
M16	17	24	2,1	1,3	■ ⊞
M18	19	27	2,3	1,5	■ ⊞
M20	21	30	2,4	1,5	■ ⊞
M22	23	33	2,5	1,5	■ ⊞
M24	25,6	36	2,7	1,8	■ ⊞
M27	28,6	39	2,9	2	■ ⊞
M30	31,6	45	3,2	2	■ ⊞

*it depends on the producer

Ribbed lock washers type S

○ **BN 20041** | Stainless steel A2

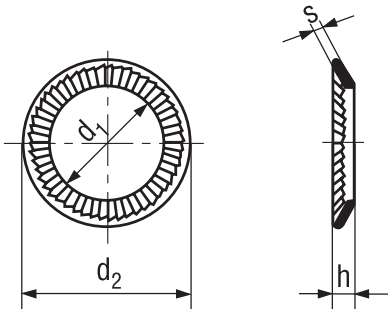

M	d_1	d_2	h max.	s	
M1,6	1,7	3,2	0,75	0,5	○
M2	2,2	4	0,75	0,5	○
M2,5	2,7	4,8	0,95	0,5	○
M3	3,2	5,5	0,95	0,5	○
M4	4,3	7	1,2	0,7	○
M5	5,3	9	1,2	0,7	○
M6	6,4	10	1,2	0,7	○
M8	8,4	13	1,6	1	○
M10	10,5	16	1,6	1	○
M12	13	18	1,85	1,25	○
M16	17	24	2,3	1,5	○
M20	21	30	2,8	1,8	○

Subject to change without notice. Please refer to your local Bossard E-Shop for the current assortment and dimensions.
Other variants upon request.

© Bossard / Fastening elements / en / 12-2026 / Subject to change without notice.

Lock washers Rip-Lock®

BN 13291 | Spring steel mechanical zinc plated thick layer passivation

BN 13292 | Spring steel zincflake coated

BN 2332 | Spring steel A2

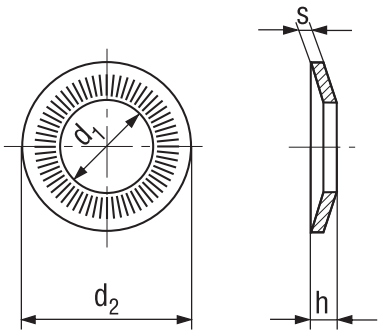

M	d_1	d_2	h	s	
M3	3,1	8	1	0,6	○
M4	4,1	10	1,4	0,9	○
M5	5,1	12	1,8	1,1	○
M6	6,1	14	2,1	1,3	○
M8	8,2	18	2,35	1,4	○
M10	10,2	22	2,75	1,6	○
M12	12,4	27	3,1	1,8	○
M16	16,4	32	4,1	2,8	○
M20	20,5	40	4,9	3,2	○

Toothed contact washers Rip-Lock®

BN 20192 | Spring steel mechanical zinc plated, thick layer passivation

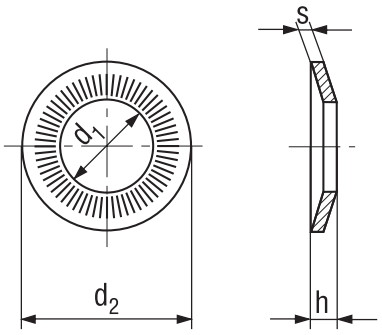

M	d_1 min.	d_2	h min	s	
M3	3,1	6	0,95	0,6	
M4	4,1	8	1,15	0,8	
M5	5,1	10	1,5	1	
M6	6,1	12	1,8	1,2	
M8	8,2	16	2,4	1,4	
M10	10,2	20	2,6	1,6	
M12	12,4	24	2,6	1,6	

Subject to change without notice. Please refer to your local Bossard E-Shop for the current assortment and dimensions.
Other variants upon request.

© Bossard / Fastening elements / en / 12-2026 / Subject to change without notice.

Other fastening elements

Locking nuts with polyamide insert

Description	Standard		Steel	Surface	BN	Ø	stainless steel	BN	Ø
Locking nuts with polyamide insert									
Hexagon nuts with polyamide insert, thin type	DIN 985		cl. 6 cl. 8 cl.. 10 cl. 8 cl. 6	steel plated steel plated steel plated steel plated steel plated	161 41161 6866 163 165 / 166	M2–M24 M5–M48 M6–M36 M8x1–M24x2 UNC / UNF	A2 A4 brass	637 1722 1403 / 521	M2,5–M24 M3–M20 M3–M8
Hexagon nuts with polyamide insert, thick type	DIN 982		cl. 8	steel plated	164	M5–M24			
Hexagon nuts with flange and polyamide insert	DIN 6926		cl. 8	steel plated	6783	M5–M20			
Cap nuts with polyamide insert	DIN 986		cl. 6	steel plated	167	M4–M16			
Sealing nut self locking with poliamid insert Seal-Lock®			cl. 8	phosphated	1226	M6–M12			
Grooved nuts with polyamide insert			steel	steel plated	1235	M10x0,75–M50x1,5			
Locking screws									
Cylinder head screws with hex socket without shank, Tuflok® spot-coated	DIN 912		8.8	steel plated	8706	M4–M10			
Pan washer head screw with flange and hex socket			~10.9	black	11252	M3–M12			
Cylinder head screws with flange with hex socket with / without shank			12.9	black	1392	M4–M12			
Cylinder head screws INBUS RIPP with ribbed flange with hex socket with / without shank		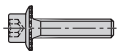	100	black	3873	M5–M12			
Grub screws with hex socket and chamfered point, Tuflok® spot-coated	DIN 913		45 H	steel plated zincflake coated	5210 5211	M3–M6 M8			
Hexagon head screws without shank, Tuflok® spot-coated	DIN 933		8.8	steel plated	5244	M5–M12			
Hexagon head screws with flange	DIN 6921	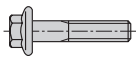	8.8	zinc yellow dichromate	2846	M6–M12			
VERBUS-TENSILOCK hexagon serrated screws		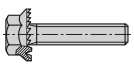	90	black	73	M5–M10			
Hexagon head screws with ribbed flange type VERBUS-RIPP		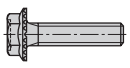	100	black zinc flake coated	2797 9727	M5–M16 M5–M16			

Subject to change without notice. Please refer to your local Bossard E-Shop for the current assortment, detailed information, dimensions and specifications. Other variants upon request.

© Bossard / Fastening elements / en / 12-2026 / Subject to change without notice.

PROVEN PRODUCTIVITY – A PROMISE TO OUR CUSTOMERS

The strategy for success

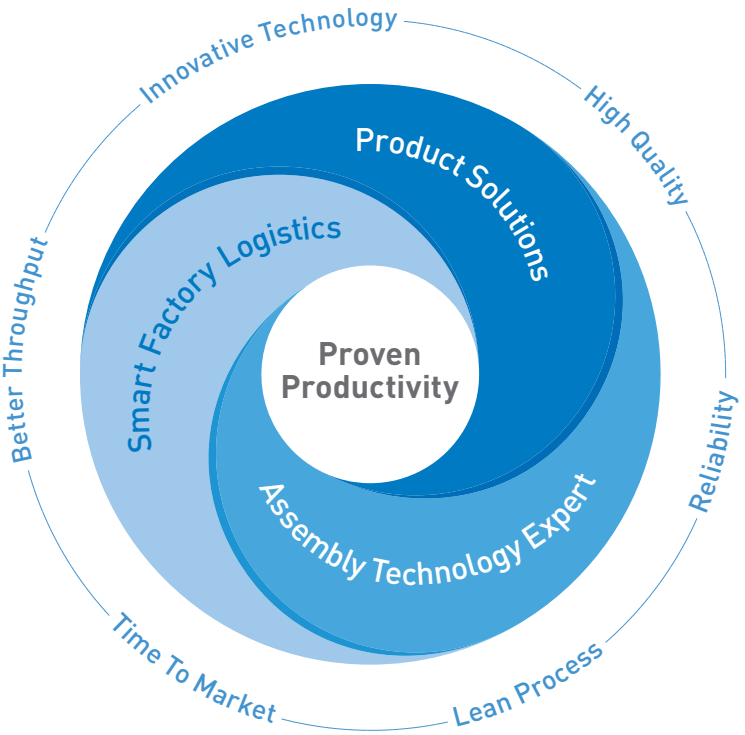

From years of cooperation with our customers we know what achieves proven and sustainable impact. We have identified what it takes to strengthen the competitiveness of our customers. Therefore we support our customers in three strategic core areas.

Firstly, when finding optimal **Product Solutions**, that is in the evaluation and use of the best fastening part for the particular function intended in our customers' products.

Second, our **Assembly Technology Expert** services deliver the smartest solutions for all possible fastening challenges. Our services cover from the moment our customers developing a new product, to assembly process optimization as well as fastening technology education for our customers' employees.

And thirdly, optimising our clients' productions in a smart and lean way with **Smart Factory Logistics**, our methodology, with intelligent logistics systems and tailor-made solutions.

Understood as a promise to our customers, "Proven Productivity" contains two elements: Firstly, that it demonstrably works. And secondly, that it sustainably and measurably improves the productivity and competitiveness of our customers.

And this for us is a philosophy which motivates us every day to always be one step ahead.

www.bossard.com

© Bossard / Fastening elements / en / 12-2026 / Subject to change without notice.